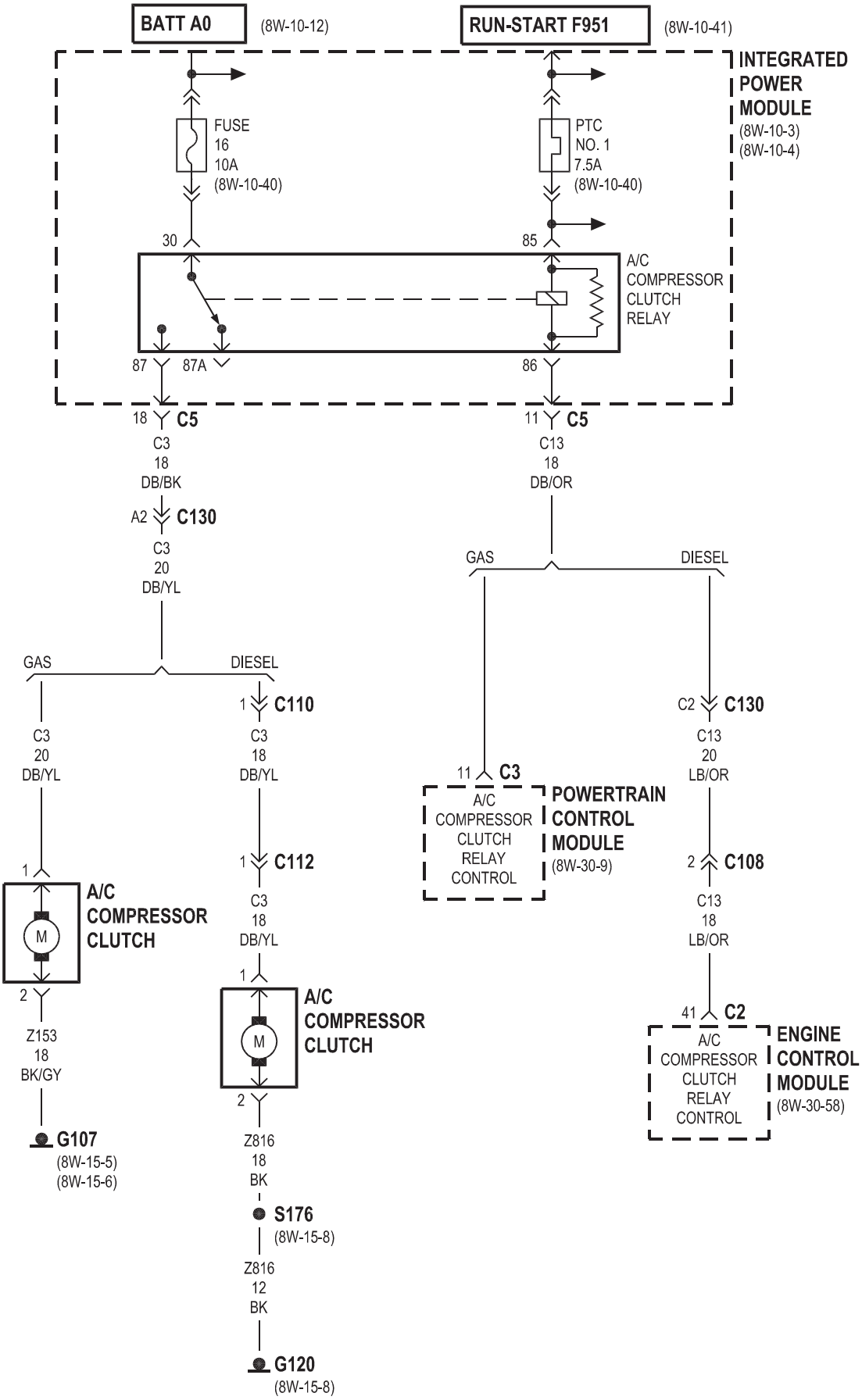
BATT A0
(8W-10-12)
RUN-START F951
(8W-10-41)
INTEGRATED POWER MODULE
(8W-10-3)
(8W-10-4)
FUSE 16 10A
(8W-10-40)
PTC NO. 1 7.5A
(8W-10-40)
30
85
A/C COMPRESSOR CLUTCH RELAY
87
87A
86
18 C5
C3 18 DB/BK
11 C5
C13 18 DB/OR
A2 C130
C3 20 DB/YL
GAS
DIESEL
GAS
DIESEL
1 C110
C3 20 DB/YL
C3 18 DB/YL
C2 C130
C13 20 LB/OR
11 C3
A/C COMPRESSOR CLUTCH RELAY CONTROL
POWERTRAIN CONTROL MODULE
(8W-30-9)
1
A/C COMPRESSOR CLUTCH
M
2
Z153 18 BK/GY
G107
(8W-15-5)
(8W-15-6)
1 C112
C3 18 DB/YL
1
A/C COMPRESSOR CLUTCH
M
2
Z816 18 BK
S176
(8W-15-8)
Z816 12 BK
G120
(8W-15-8)
2 C108
C13 18 LB/OR
41 C2
A/C COMPRESSOR CLUTCH RELAY CONTROL
ENGINE CONTROL MODULE
(8W-30-58)